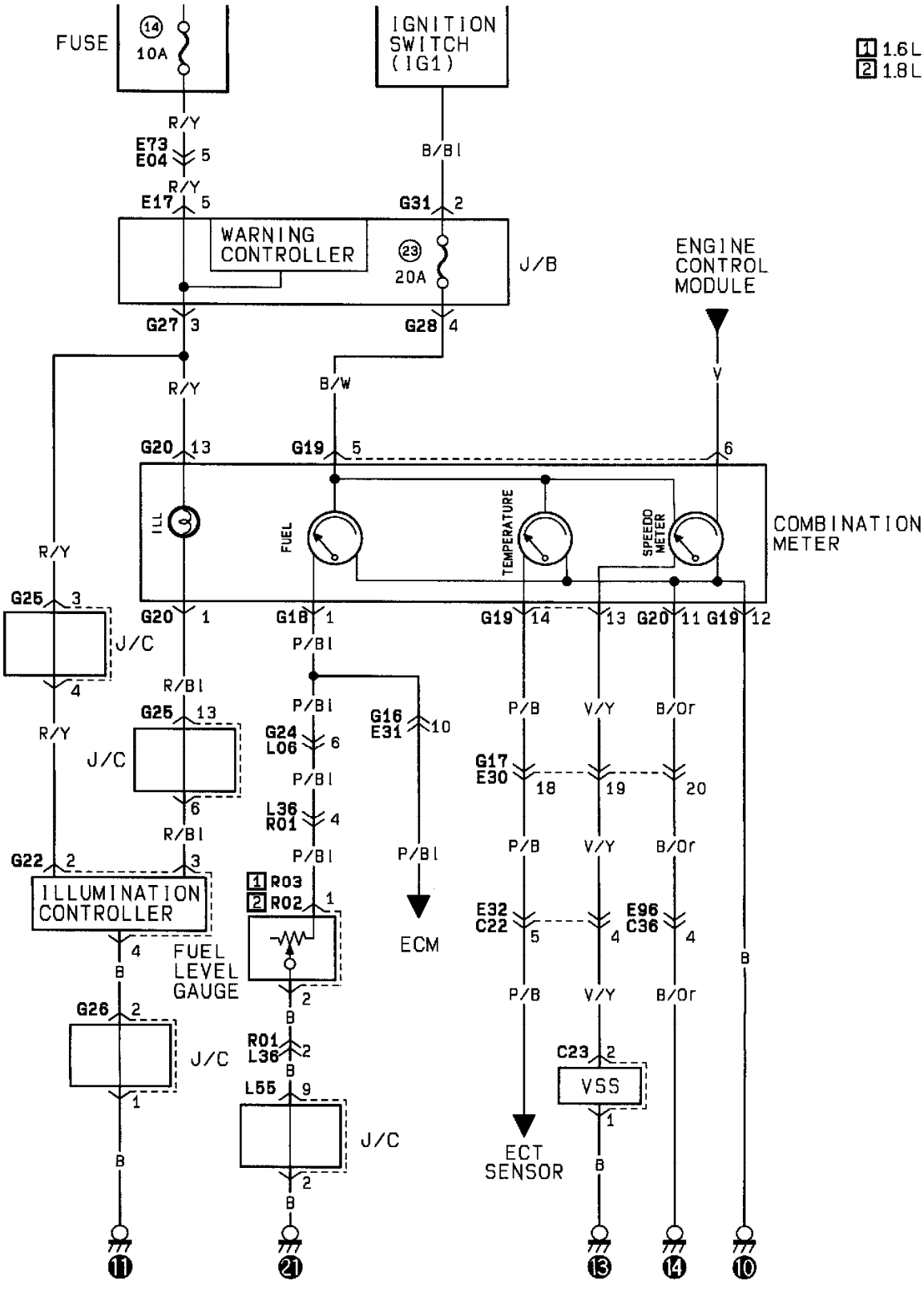
FUSE
14
10A
IGNITION SWITCH (IG1)
1 1.6L
2 1.8L
R/Y
E73
E04
5
B/Bl
E17
G31
WARNING CONTROLLER
23
20A
J/B
ENGINE CONTROL MODULE
G27
G28
V
B/W
G20
G19
ILL
FUEL
TEMPERATURE
SPEEDO METER
COMBINATION METER
G25
J/C
R/Bl
P/Bl
G16
E31
10
G24
L06
6
L36
R01
4
G17
E30
18
19
20
P/B
V/Y
B/Or
G22
ILLUMINATION CONTROLLER
1 R03
2 R02
FUEL LEVEL GAUGE
ECM
E32
C22
E96
C36
B
G26
R01
L36
L55
9
C23
VSS
ECT SENSOR
11
21
13
14
10