Suspension: Service and Repair
Front

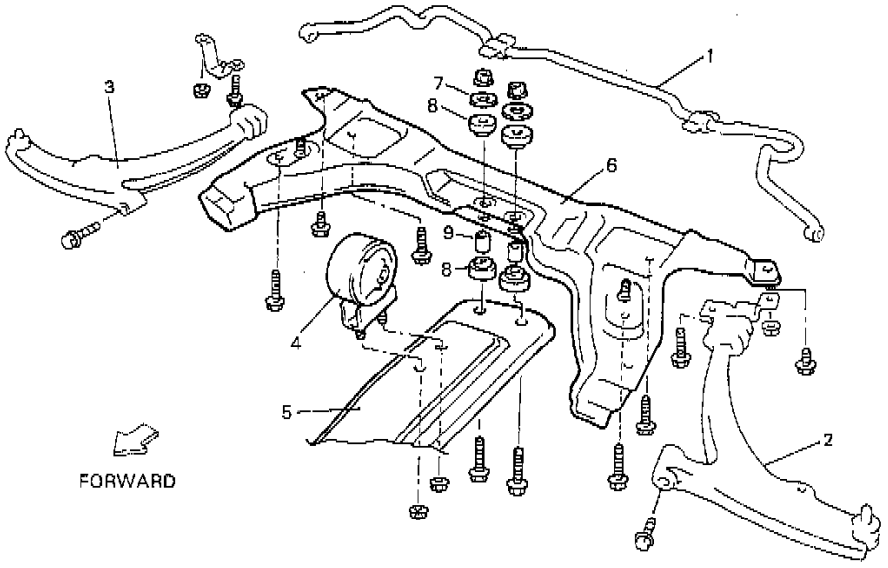

1. Stabilizer bar
2. Suspension arm (Left)
3. Suspension arm (Right)
4. Engine rear mounting
5. Mounting member
6. Suspension frame
7. Washer
8. Cushion
9. Spacer

REMOVAL

1. Hoist vehicle and remove wheels (right & left).
2. Remove stabilizer bar.
3. Remove suspension arms (right & left).

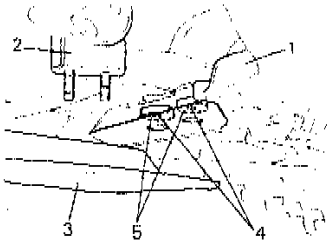

1. Suspention frame
2. Engine rear mounting
3. Mounting member
4. Spacer
5. Cushion

4. Remove engine rear mounting nuts and engine mounting member bolts to separate member from suspension frame.

   NOTE: Be careful not to loose cushions and spacers which may stick to suspension frame.

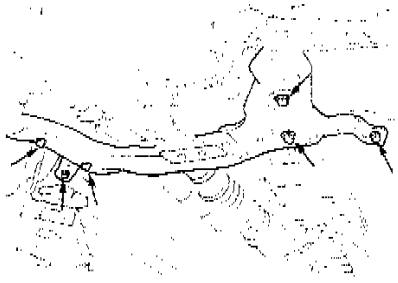

5. Remove suspension frame from body.

INSTALLATION

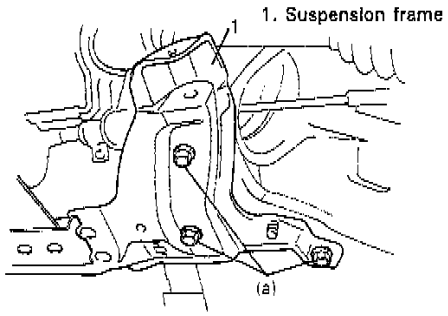

1. Install suspension frame to body, and tighten bolt to specified torque.

   Tightening Torque (a): 90 Nm (65.0 ft. lbs.)

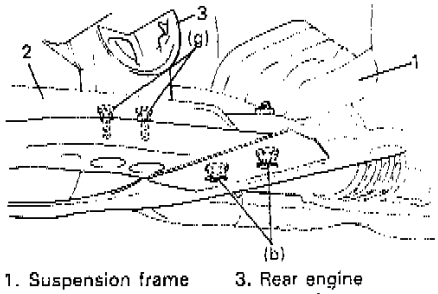

1. Suspension frame
2. Mounting member
3. Rear engine mounting

2. Install mounting member, spacers and cushions to suspension frame and tighten bolts and nuts to specified torque.

   Tightening Torque:
   (b): 55 Nm (40.0 ft. lbs.)
   (g): 45 Nm (33.0 ft. lbs.)

3. Install suspension arms (right & left).
4. Install stabilizer bar.

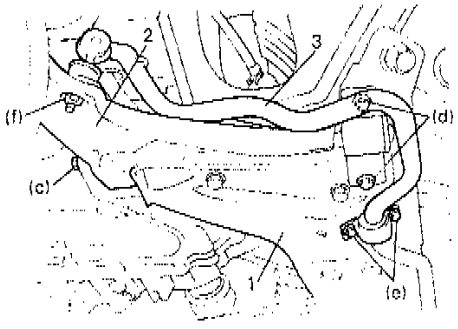

1. Suspension frame
2. Suspension arm
3. Stabilizer bar

5. Tighten bolts and nuts to each specified torque.

   Tightening Torque:
   (c): 90 Nm (65.0 ft. lbs.)
   (d): 37 Nm (27.0 ft. lbs.)
   (e): 23 Nm (17.0 ft. lbs.)
   (f): 28 Nm (20.5 ft. lbs.)

6. Install wheels (right & left) and lower hoist.
7. Confirm front end (wheel) alignment.